AIRTOUCH
ZONE CONTROL SYSTEM
Installation Manual

www.polyaire.com.au

©2014 Polyaire Pty Ltd

TABLE OF CONTENTS

1) **Application** 2

2) **Features** 2

3) **Components** 3

4) **Configuration** 4

5) **Pre-Installation** 6

6) **Component Installation** 7

7) **Recommended Commissioning Procedure** 10

7.1 Parameters 10

1) Touch Screen Address 11
2) Number of Groups in the System 11
3) Supply Air Safety High & Low Limits 12
4) Spill/Bypass Mode 13
5) Installer Settings Password 14

7.2 Grouping Zones 15

7.3 Balancing Zones 15

7.4 Naming Groups 16

7.5 Enabling/Disabling Service Reminder 17

7.6 Setting up AC Control (Optional) 18

1) Select AC brand 18
2) AC Auto Off option 19

7.7 Setting up Wi-Fi Connection 19

7.8 Testing Damper On/Off 22

7.9 Wiring Diagrams 23

7.10 Downloading and Installing AirTouch Application on Mobile 30

8) **Troubleshooting Guide for Installers** 31

Liability

Please read the instructions before installing this Zonemaster Zoning Control System.

Polyaire Pty Ltd does not accept any responsibility for loss or damage that may occur as a result of the incorrect installation of this Zonemaster Control System.

1) Application

The Zonemaster AirTouch control system is a fully featured and engineered system that is designed to manage the air flow from the AC unit providing a balanced and managed airflow to all outlets. It is well suited to all ducted reverse cycle, ducted heating and cooling systems in light commercial, residential and apartment applications.

2) Features

For Installers

- 24 volts for easy and safe installation and maintenance.
- User friendly 5" touch screen interface to simplify setup process.
- Supports up to 16 individual zones (Zone 1, 2…9, A, B…G), 16 groups (Group 1, 2…9, A, B…G) with maximum of 4 zones in a group. Nine zones/groups and above will require an extension module.
- Remote zone balancing --- each zone's opening position can be programmed for balancing via touch screen between 10-100%.
- Auto spill/bypass (dedicated bypass zone port) --- the designated zone dampers are forced open when all zones are turned off.
- Safety system --- Opens all dampers if the supply air temperature reaches low or high limit.
- Dampers are connected directly to the main control module or its extension module for easy diagnosis.

For End Users

- User friendly large touch screen control interface.
- Wireless Remote control using smart WiFi enabled devices (iPhone, Androids and tablets).
- Control from anywhere over internet*
- Intuitive user interface.
- Control AC unit (Optional, works with certain brands and models only).
- Control airflow to individual groups.
- Colour LCD for clearer display.
- Personalized system settings and group labelling
- Wall mounted with up to two touch screens available in a system.
- 5-1-1 Programmable On/Off time programs and AC Timer.
- One selectable turbo group to cool/heat a particular area quicker.
- Half year, One year and Two year service alerts remind customers to call technician for cleaning and servicing AC system.
- All zones automatically resume their original on/off state once power is restored after power outage.

**Internet access will depend on the setting of the home router*

3) Components

Note: Each component is sold separately or in kits.

3.1 Wall Controller (Touch Screen)

Users can input control commands from the wall controller to turn a group or AC on and off. It is used to input all program parameters. The colour LCD displays clock, group/zone status, WiFi status, AC status, temperature and other statuses.

3.2 Main Control Module and Extension Module (optional)

Main control module (8 zones with bypass port) and its optional extension module (extra 8 zones) control the position of motorized damper of each zone.

3.3 Motorized Damper (Bright Green)

Motorized damper drives the blade of the damper to turn the air supply on/off.

3.4 Cables

Cables with left latch (for data) or central latch (for control) plugs connect the main control module, extension module (if applicable), touch screen, and motorized damper together.

3.5 Supply Air Sensor (optional)

Supply air sensor measures the temperature of the supply air for safety purposes.

3.6 Power Supply

24VAC transformers provide power to the main control module and extension module.

3.7 Rechargeable Battery

The backup battery is used to store the time and settings when there is a power surge.

3.8 AC Control kit (Optional)

AC control kit is used to connect the AirTouch main module with the AC Indoor unit board (only for some models of AC manufacturers).

4) Configuration

The Zonemaster AirTouch system is a star architecture system that allows communications between the AirTouch main control module, extension module, AC unit, WiFi router (to connect to smart phones and internet), up to 16 zone dampers, and up to two touch screens. Figure 1 shows the connection of devices such as the WiFi router, AC indoor unit PCB, AirTouch extension module, two touch screens, and eight dampers to the AirTouch main module. Figure 2 shows the connection of eight dampers to the extension module. Figure 3 shows the linking of the main module to the extension module, AC unit, touch screens, and smart phone.

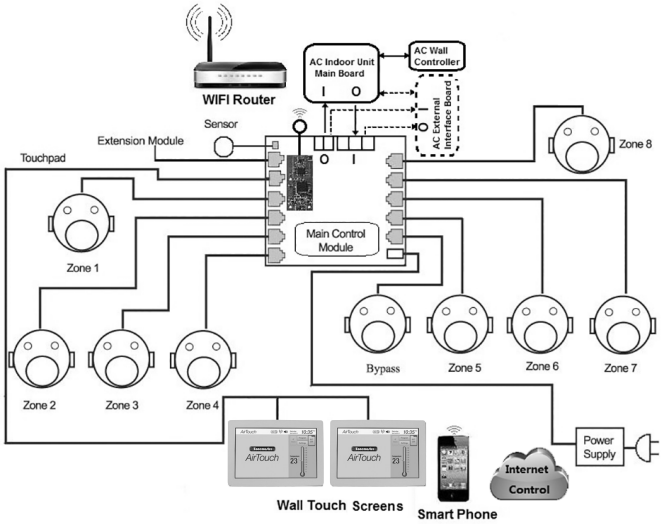

Figure 1: AirTouch Main Control Module connected to AC Indoor Board, WiFi router, 2 Touchpads, Smart Phone and 8 dampers

Eight motorized dampers can be connected to the main control module. Nine dampers and above (up to 16) will need the extension module.

In addition, there is a dedicated bypass port where a damper is used to return the supply air directly to the return air duct. (See Spill/Bypass Mode on page 13)

Extension Module

An extension module can be plugged into the main control module to expand the number of zones to 16 as shown in Figure 2. A separate 24VAC power supply is required to supply power to the eight extra zones.

The wiring of the AirTouch system is straightforward. A cable with central latched plugs connects a motorized damper to the relevant output port clearly marked on the main control or extension module.

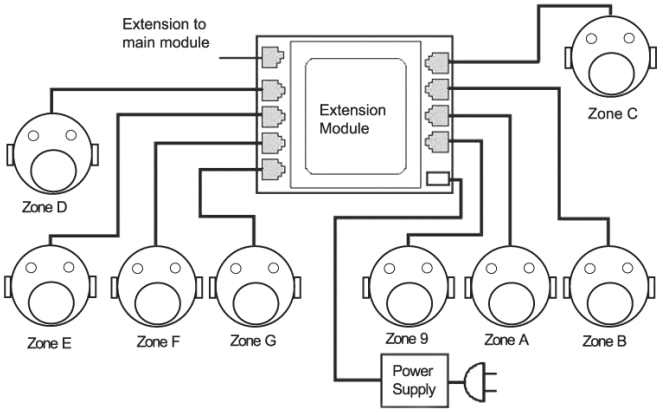

Figure 2: AirTouch with Extension Module and 8 Zone Ports

Main module and extension module can be in different locations and connected via a cable with left latched plugs on both ends as shown in Figure 3. Touch screen is connected to the 'T' port on main module using a cable with left latched plugs.

Up to two touch screens can be joined in a system. The two touch screens are connected to each other with a double left latched adaptor in serial.

Note: When installing two touch screens, use a long cable (as long as practical) between the main module and the double left latched adaptor, two short cables between the adaptor and two touch screens and try to maintain the two short cables at the same length.

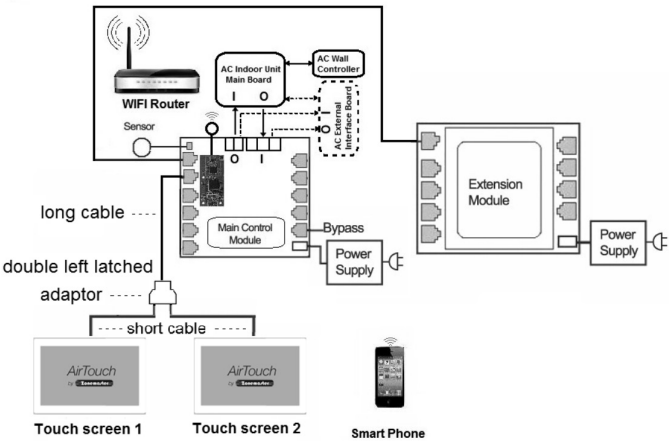

Figure 3: AirTouch with Main Control and Extension Module, WiFi router, AC Indoor Board, 2 Touch Screens, Smart phone and 16 Zone ports (Dampers not shown)

NOTE: Please see Page 23-29 for detailed Wiring Diagrams for connection of the Main Module to the chosen Air Conditioning Unit.

5) Pre-Installation

Good planning leads to a successful zone system installation. Before physical installing and commissioning a zoning system, please complete the following listed tasks:

5.1 Decide how many zones (dampers) are to be controlled in the system.

5.2 Assign lower order zones (1, 2, 3…) to dampers closest to the return air grille. These zones will automatically open when spilling is required. However avoid using lower order zones for bedrooms as this may cause discomfort if auto spilling occurs during sleep time.

5.3 Group zones according to customer's requirements. Each group initially has one zone but can have up to a maximum of four zones (Example: There could be one or more zones going into a common area such as Kitchen/Dining or Family/Dining room). Work out the total group number (Maximum total group number in a system is 16).

5.4 Record the above mentioned information to table 1 and 2 on page 15 in the User manual and to the table on the sticker of the Main Control Module.

5.5 Setup the Wi-Fi connection before installing the AirTouch main module into the ceiling. Place the main module next to the home router and follow the Wi-Fi setup process from Page 19 of this manual. This will help eliminate Wi-Fi set-up problems once the module is installed into the ceiling.

After setting up the WiFi connection, please position the main module in a position where it will be installed and within the effective range of the home WiFi router. This can be done by checking the WiFi logo on the touch screen after placing the main module where it's going to be installed. The selected position is fine if the WiFi logo appears on the touch screen after powering up the AirTouch and connecting it to the touch screen. Otherwise, please move the main module closer to the home router and try it again till the WiFi logo appears on the touch screen.

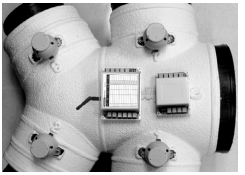

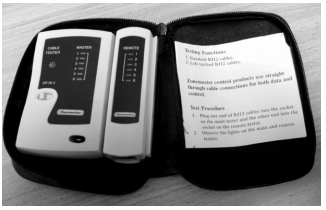

Zonemaster **Cable Tester**
(Item Number: 657089)

NOTE: It is important to test all cables before installation. Testing all cables to be used before the start of the installation will save considerable diagnostic time if the fully installed system is subsequently found to have a problem. Cable testing is quick and easy with a Zonemaster Cable tester available from Polyaire

6) Component Installation

6.1 After setting up WiFi for the system as specified on Page 19-22 mount the main control module and/or extension module (if using more than 8 zones) by screwing the box (es) to a roof frame or Polyaire Diffusion Fitting (PDF).

6.2 Remove the two-side covers on the main control module so that all LEDs and sockets for zone dampers are exposed.

6.3 If extension module is used, connect main module to extension module at 'E' port on both modules with a One metre left latched cable (provided).

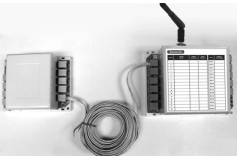

6.4 Use pre-tested cable to connect 'Z1' port on the main module to the motorized damper of the 1st zone.

6.5 Repeat step 6.4 to connect other zone dampers, including bypass damper ('B' port) if installed, to their relevant zone ports on the main control module and extension module.

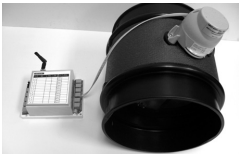

6.6 Mount the supply air sensor in the supply air duct between the fan coil and the first damper and push the plug of supply air temperature sensor into the socket on the main control module (Optional).

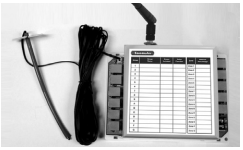

6.7 Connect the touch screen to the 'T' port on the main module. If two touch screens are used, use the provided left latched cables and a 1-to-2 female-female splitter coupler to join all touch screens. (See instructions below on fitment of touch screen to wall).

6.8 Connect the 24VAC transformer to screw terminals on the main control module. If extension module is used, connect another 24 VAC transformer to the screw terminals of the extension module.

6.9 Connect the Zonemaster main module to the AC unit using the required kit for the respective AC unit (cables and interface board). Follow the wiring diagram for the respective unit provided on Page 23-29 of this manual.

6.10 If both transformers (main module and extension module) share the same power switch, switch the power on. ***(IMPORTANT NOTE) If NOT, switch on the power to extension module first. Then turn on the power to main module.*** Otherwise, the extension module will NOT be initialized properly. Circular Red LED on the main module (and extension module) should be on and the system will start initializing & finish in about 30 seconds after power on.

6.11 Install the battery as shown in the picture on the main control module. It is recommended to install the battery after power is on. Otherwise the system may not be initialized properly due to the low voltage of the new battery.

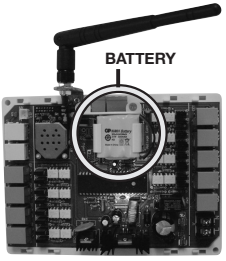

6.12 Replace the side covers back on the main control and extension module once finished setting and commissioning.

6.13 Record the grouped zones and balancing details on the sticker off the Main Control Module after commissioning the system.

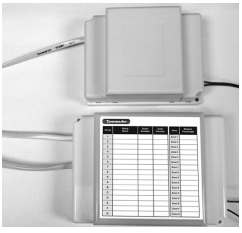

6.14 Fit the Touch Screen to wall

The plastic casing of the touch screen consists of two halves. The front cover contains the PCB board along with the LCD/touch screen. The back cover attaches to the wall as a mounting base. During the installation process the case will have to be opened to mount the touch screen on the wall. Follow the steps below to carefully install the touch screen to the wall:

a) Slide the back base to bottom side to clear the stops on the front cover

b) Remove the base from the front cover

c) Position the back base on the wall where the cable is (about 1.5m high from the floor). Ensure it is away from any heat or cool source and mark the cable hole and screw holes.

Note: The correct back cover direction is marked on its surface; follow that mark when fixing the back cover.

d) Cut the rectangular hole for the cable and fix the back base to the wall by using four screws on the marked positions.

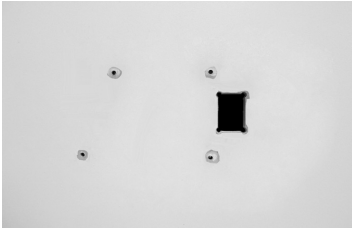

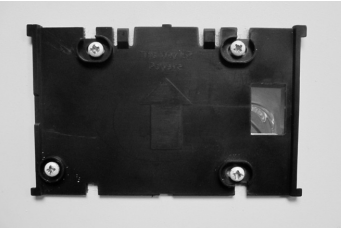

e) Retrieve the touch screen cable (from main control module) out of the cable hole and plug it into the touch screen.

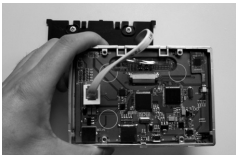

f) Align the bottom edge of the back base with the bottom inside of the front cover and the two side edges of the back base with the front cover.

g) Gently push the front cover against the wall and make sure the back of front cover is flush against the wall. And then push the front cover downwards with two figures holding the top side of the front cover where there are two slots till the two snap-ons click in.

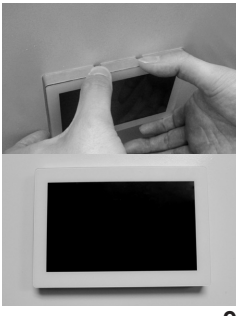

7) Recommended Commissioning Procedure

7.1 *Parameters*

System parameters can be set up from 'Installer Settings' screen. Follow the steps below to set required values.

a) Touch Settings on the home screen (Figure 3) to enter to 'Settings' screen (Figure 4).

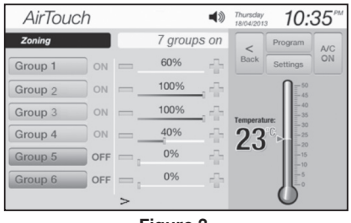

Figure 3.

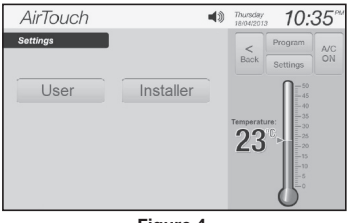

Figure 4.

b) On 'Settings' screen, touch Installer button to show the keyboard for entering the password of installer settings (Figure 5).

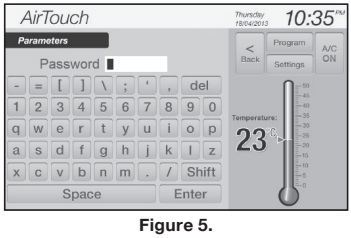

Figure 5.

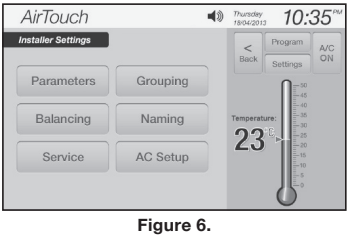

Figure 6.

c) Enter the password of installer settings (Figure 6), the default password is *'Polyaire'*.

NOTE: The password is case sensitive. Maximum length for the password is eight characters but it can also be blank. If the password is not set to blank, enter ***** on the password field will bring up the correct password.***

7.1.1 Touch Screen Address

Up to two touch screens can be installed in one AirTouch system. Each touch screen has a default address of '1'. During commissioning each touch screen should be assigned a unique address for communicating with the main control module properly. Follow the following steps to set the Touch screen Address:

a) On 'Installer Settings' screen (Figure 6), touch 'Parameter' to get to 'Parameter' screen (Figure 7).

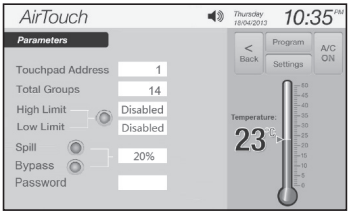

Figure 7.

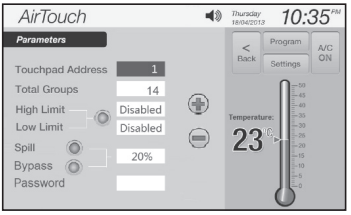

Figure 8.

b) Touch the edit field of 'Touchpad Address' to highlight it, and buttons will appear (Figure 8).

c) Use and buttons to select a touchpad address from 1 to 2.

NOTE: Each controller (touch screen) must have a unique address. Two touch screens with the same address will cause communication problems between the main control module and the touch screens.

7.1.2 Number of Groups in the System

For the purpose of group status display and spill/bypass zone calculation, the system needs to know the total number of groups to be installed. The factory default number is 8.

IMPORTANT: This number must be equal to the total group number used in the system as planned in Pre-Installation process. If this is wrong, the system may not work properly.

a) Touch the total group field, and buttons will appear (Figure 9).

b) Press or button to change to the total number of groups in the system. The selectable number is from 1 to 16.

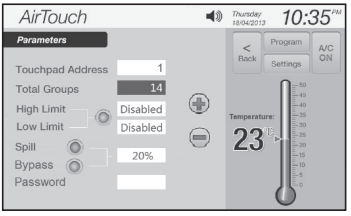

Figure 9.

7.1.3 Supply Air Safety High & Low Limits

For safety reasons, the system can monitor the supply air temperature. A supply air sensor must be inserted at the supply air end of the AC and the other end is to be connected to the Main module, as shown on Page 8 for this safety function to be activated. If the temperature moves outside the set limits, all dampers in the system will be forced open. The factory default setting for the safety control is “disabled”. It is optional for using this function.

a) On the ‘Parameter’ screen (Figure 6), touch the radio button of high limit and low limit to enable or disable safety function.

   If the supply air sensor has not been installed or the supply air sensor is faulty and the replacement sensor is not available immediately, the system can still run by disabling the safety function.

b) Highlight the high limit or low limit by touching the edit fields accordingly, and then adjust them to the required value by touching (+) or (−) button (Figure 10).

   The adjustable range of the high limit is from 45°C to 75°C and adjustable range of the low limit is from 0°C to 15°C. The factory default values are 60°C for high limit and 5°C for low limit.

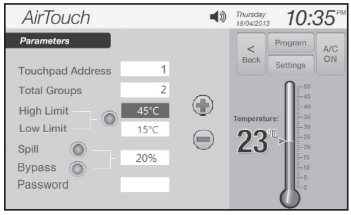

Figure 10.

NOTE: If the limits are reached, ‘Safety is Activated’ will be displayed on the home screen (Figure 11). The ON/OFF function of groups will be disabled till supply air temperature moves back within the limits or the High Limit and Low Limit protection is disabled (there is about one minute delay after disabling the protection).

Check the air conditioning unit if ‘SAFETY IS ACTIVATED’ displays on the AirTouch screen.

Figure 11.

7.1.4 Spill/Bypass Mode

Bypass and spill modes are another safety feature of the AirTouch system to prevent pressure from building up and causing duct damage. This usually occurs if someone has turned off all dampers while the A/C unit is running leading to a pressure buildup (and potential of duct puncture, blow-offs or joints splitting).

When opened zones in the system are less than the bypass/spill set-point which is a percentage of opened zones against total zones, the designated spill dampers or Bypass damper will be automatically opened to prevent pressure from building up.

Spill Mode

This is a program designed to automatically open several dampers if someone attempts to shut down all dampers thus preventing pressure build up. Spill mode uses the zones with lower addresses in the system. When allocating addresses to zones in spill mode, it is strongly recommended to give lower addresses to those zones that have higher spill privileges. These zones are normally located closer to the return air grilles. The lower the address, the higher the spill privilege the zone has.

Another point to remember is DO NOT use bedrooms as spill zones. During sleep time if the air conditioner is on and spill zones are automatically forced to open, the spill zones will be very cold or hot. This may cause discomfort if bedrooms are used as spill zones.

When the spill set-point is reached, the main control module instructs zone 1 to open as spill zone. If the first spill zone cannot satisfy the spill air control, zone 2 will automatically open to spill excess air. This process will continue until the spill air set-point is satisfied in the system. Example: In an eight zone system, if set point is set at 30% then it will have at least 3 (calculated value = 2.4) or more zones remaining open.

Bypass Mode

In Bypass Mode there is an extra damper and a length of duct that goes directly from the supply air duct back to the return air duct. The main control module instructs the bypass damper to open and dump excess air to the return air duct.

The bypass damper should be carefully sized to be able to handle excess air while all zones are closed. The bypass damper should be connected to the ‘B’ port on the main control module.

The factory default is set in spill mode and the set-point is 30%. When the setpoint is reached for spill, the home screen shows ‘Spill is Activated ‘ and some of the lower order zones remain open and the status of the Groups will display ‘Spill’ in the home screen (Figure 12 on next page) if the lower order groups were closed.

Similarly if bypass set-point is reached, the screen displays 'Bypass is Activated' as shown in Figure 13.

Figure 12.

Figure 13.

Spill/Bypass Settings

a) In the 'Parameter' screen (Figure 7), touch the option buttons of spill or bypass to select spill mode or bypass mode.

b) Touch spill/bypass edit field to make it editable, and then and buttons will appear.

c) Touch or button to change the spill/bypass set-point to required value. The adjustable range is from 0% to 50% with 10% increments.

IMPORTANT: DO NOT set spill/bypass set-point to 0% unless there is a permanent open zone used as spill zone. Otherwise, there will be no spill zone when all zones are closed and damage may be caused by high pressure build up inside ducts if air conditioner is running.

7.1.5 Installer Settings Password

The password which will be used in Figure 5 is to prevent unauthorized changing of the installer settings. To reset this password, touch the password edit field in the 'Parameter' screen (Figure 7), and then type in the new password and touch 'Enter' key to confirm the password change (Figure 14).

Figure 14.

7.2 Grouping Zones

For ease of control operation, multiple zones can be grouped together. The grouped zones are treated as one group with its own name and turned on or off together. Individual balanced damper position is not affected by grouping, which means zone balancing can be conducted before or after grouping.

Grouping can be carried out as follows:

a) In 'Installer Settings' screen (Figure 6), touch Grouping to enter 'Grouping' screen (Figure 15).

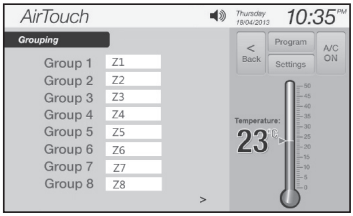

Figure 15.

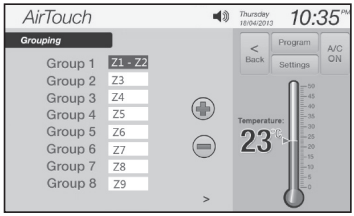

Figure 16.

b) Touch the edit field of the group, ⊕ and ⊖ buttons will appear.

c) Touch ⊕ or ⊖ button to add or minus zones to the group

d) Repeat steps b) and c) to define all groups.

NOTE: The maximum number of zones in a group is four. The zones to be grouped will be consecutive zones. The factory default for grouping is that each group has one zone.

7.3 Balancing Zones

Remote balancing feature of AirTouch offers the flexibility of balancing the amount of airflow to each zone electronically. Once the opening position of the damper is set, the damper will only open to this position. The default setting for each damper is 100% opening position and the adjustable range is between 10% and 100%. The balancing settings can be conducted on the touch screen as below.

a) In 'Installer Settings' screen (Figure 6), touch Balancing

b) The system will show a prompt (Figure 17) and then enter the 'Balancing' screen (Figure 18).

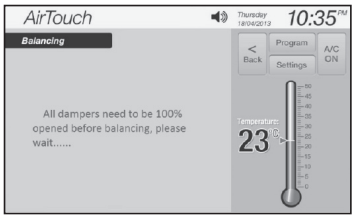

Figure 17.

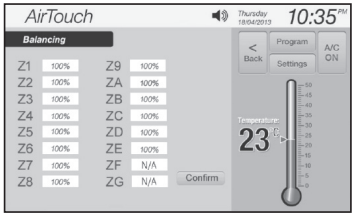

Figure 18.

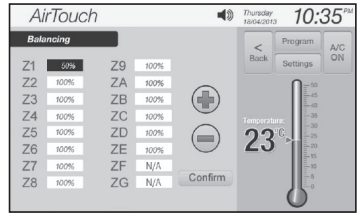

Figure 19.

c) Click the edit field to select the zone to be balanced, the field will be highlighted then (+) and (−) buttons will appear (Figure 19).

d) Touch (+) or (−) button to adjust the balance percentage.

e) Touch Confirm button to accept the changes just made. Otherwise the changes will be lost if Confirm is not pressed.

NOTE:

- ***The balancing menu will display all the 16 zones irrespective of the number of zones actually present in the system.***
- ***The balancing percentages of the inactive zones remain locked and show as N/A.***
- ***The %OPEN value on the Zoning screen can be operated by the user for additional air flow adjustment to the groups. The overall opening % of the zone is calculated as %OPEN x Balance %.***

7.4 Naming Groups

The name of a group is set as 'Group-address' (e.g. Group-1) in default setting. The names can be customized as follows:

a) In 'Installer Settings' screen (Figure 6), touch Naming to enter 'Naming' screen (Figure 20).

b) Touch the edit field of a group to rename it. A name list will appear for selection (Figure 21).

c) Touch a name in the list to specify the name to the group, and also you can touch Keyboard to enter or edit a name manually (Figure 22).

d) Touch the Enter to confirm or touch < Back to cancel and exit.

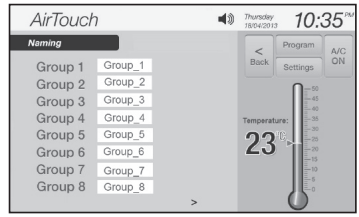

Figure 20.

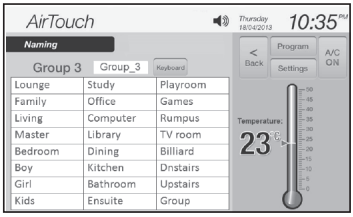

Figure 21.

Figure 22.

7.5 Enabling/Disabling Service Reminder

There is a built-in service reminder in the AirTouch system for half year, one year and two years to automatically display an alert notifying customers that the air conditioning system is due for service. Installers can also use this feature to leave their details such as their names and contact numbers.

The service reminder will display 'HALF YEAR SERVICE DUE', 'ONE YEAR SERVICE DUE' or 'TWO YEAR SERVICE DUE' and installer's name and contact number on touch screen for the set number of days if it has been enabled for half year (182 days), one year (365), two years (728 days) respectively since the air conditioning system had been commissioned or serviced as shown in figure 26. The days in the 'Service' screen will automatically reset to 1 after 728 days or can be manually changed. The Service Reminder is disabled by default but can be enabled as follows:

a) In the 'Installer Settings' screen (Figure 6), touch Service to enter the 'Service' screen (Figure 23).

b) Touch the service reminder option buttons to enable or disable the relevant reminders.

c) Touch the edit field to change to the desired setting. The installer name and number can be entered by using a keyboard (Figure 24). or buttons can be used to adjust reminder and running days (Figure 25).

Maximum length of the name is 10 characters and the phone number is 12 digits.

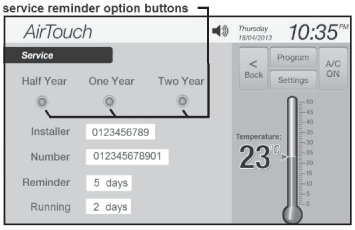

Figure 23.

Figure 24.

Reminder information will be displayed on the right side of the touch screen when the service is due (Figure 26) for the length of the reminder days (5 days in the example of figure 23). Touch the information area will clear the alert before the set reminder days has reached.

The running days show how many days having passed since the system has been commissioned or serviced. It will automatically start from 1 for every 728 days.

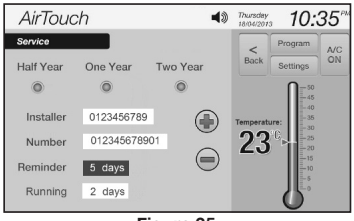

Figure 25.

Figure 26.

NOTE: Record the above parameters such as Grouped Zones & Balancing on the sticker of the Main Control Module and the System Configuration, Grouped Zones along with Named Groups, Balancing and Installer details to table 1, 2, 3 and 4 respectively on page 15 and 16 of the User manual for future reference.

7.6 Setting up AC Control (Optional)

7.6.1 Select AC brand

AC Setup is used to select the Brand/Model of the AC unit from a specified list to connect with the AirTouch system. Before setting this up, ensure the AC indoor PCB is connected to the AirTouch main module as shown in the wiring diagrams (Page 23-29) based on the selected unit. Ensure the AC unit can be configured to work with a third party controller and it is set up correctly for the third party control. The following are the options that can be selected from the list:

- None
- Daikin
- Fujitsu
- Hitachi
- LG
- Toshiba
- Mitsubishi Electric
- Panasonic without CZ-TA31P
- Panasonic with CZ-TA31P
- Panasonic S model
- Samsung with MIM-B14

The default is setup as 'None', meaning no AC is connected. Follow these steps to choose the appropriate unit.

a) In 'Installer Settings' screen (Figure 6), touch 'AC Setup' to enter the 'AC Setup' screen (Figure 27).

b) Touch the edit field of 'AC Brand', all selectable AC brands/models will be listed (Figure 28).

c) Touch the desired AC brand/model to make it as the current connected AC.

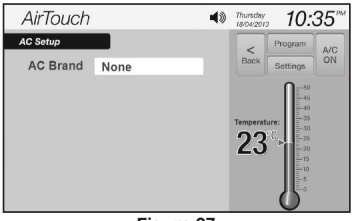

Figure 27.

NOTE: Some of the models from the above listed brands may not have the terminals as shown in the wiring diagrams. In this case, the AirTouch system cannot be connected to the AC unit. If the AirTouch system is not connected to any AC Unit, select 'None' from the list. To connect a brand/model not listed, please contact Polyaire.

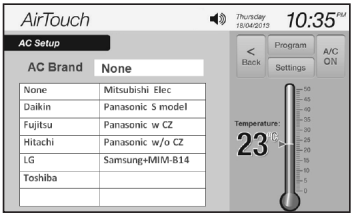

Figure 28.

7.6.2 AC Auto Off option

AC auto off function provides an option (Figure 29) to protect the duct system. If this option is selected (the radio button is highlighted), the AirTouch system will try to turn off AC after all groups are turned off. It is disabled by default.

NOTE: AC Auto Off option will not appear if AC Brand is 'None'.

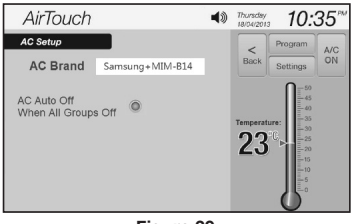

Figure 29.

7.7 Setting up Wi-Fi Connection

The instructions in this section demonstrate how to connect AirTouch to a home router, which will enable the control/operation of AC unit and zoning via Wi-Fi and internet. When selecting a position for the AirTouch main module to be installed, please make sure it is within the effective cover range of the home WiFi router which the AirTouch will be connected to. This will ensure reasonable WiFi signal strength and provide a reliable connection between AirTouch and the home router after they are connected and the main module is installed. It is highly recommended to undertake this setup by placing the AirTouch main module as close as practical to the router, ideally about 1.5 to 2 meters, before installing the main module.

a) On ‘Settings’ screen (Figure 4), touch User and then touch WiFi Setup to enter the ‘Wi-Fi Setup’ screen.

I. If AirTouch is currently connected to a WiFi network, the ticked SSID name will be displayed on the list field of the screen as Figure 30.

II. If AirTouch currently has no WiFi connection but was connected to a WiFi network before, the SSID field will show the last SSID for searching (Figure 31).

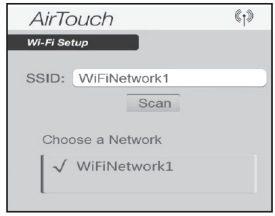

Figure 30.

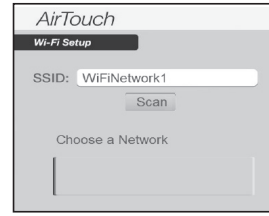

Figure 31.

b) If the wireless network SSID is known, touch SSID edit field to display the keyboard on screen (Figure 32) and then input first few characters of the SSID. Touch Enter to confirm the SSID input.

Figure 32.

Figure 33.

c) Touch Scan to start scanning for available Wi-Fi networks/routers (Figure 33).

NOTE: The system will scan and display two WiFi network SSIDs each time, so it will be more efficient if the correct SSID is input before scanning.

d) On completion of the scan, up to two found routers with their SSIDs starting with the input characters will be displayed (Figure 34). Touch the desired router’s name and then go to next step. If the desired router is not in the list, go back to b).

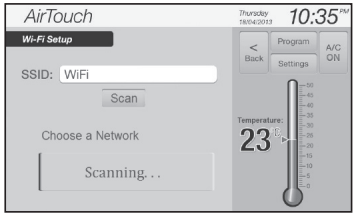

Figure 34.

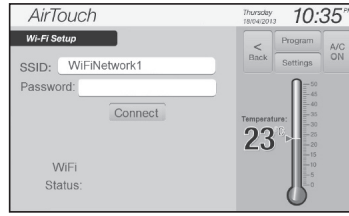

Figure 35.

e) Touch the password edit field (Figure 35) to enter the password of the Wi-Fi network (Figure 36). Touch Enter to confirm the password input.

Figure 36.

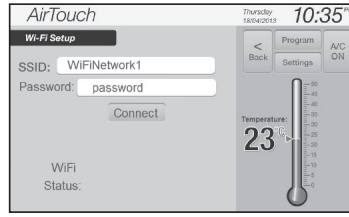

Figure 37.

f) Touch Connect (Figure 37) to connect the desired WiFi network. 'Connecting' will appear on the screen (Figure 38).

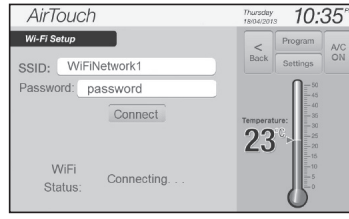

Figure 38.

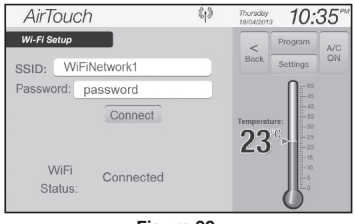

Figure 39.

Figure 40.

g) The AirTouch's screen will display 'Wi-Fi Status: Connected' (Figure 39), if the connection was successful. If Wi-Fi connection failed (Figure 40), go back to a) to restart the process.

h) The Wi-Fi logo will appear on the status bar after connecting to the WiFi network (Figure 41). The connection will stay permanent till the setting changes on the home router such as SSID, password, security levels, filters and others. The connection will automatically resume after power off and on cycle.

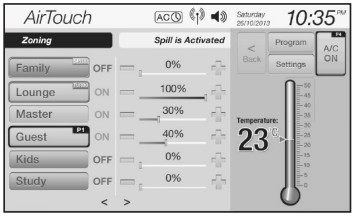

Figure 41.

Now you can run AirTouch applications on your smart devices to control AC or zoning.

7.7 Testing Damper On/Off

a) Switch on the air conditioner.

b) Enter the home screen of AirTouch.

c) Touch the group buttons to turn groups on or off to check if the dampers are correctly connected by feeling the air at the outlet.

d) The Turbo group can be tested by selecting the relevant chosen group as Turbo mode in the 'User Settings' and then press the group button until active turbo mode is displayed on the screen for that particular group.

NOTE: Bypass zone damper cannot be tested via touch screen. It has to be checked by observing the indicator on the damper motor.

7.9 Wiring Diagrams

1. Wiring Diagram for AirTouch System

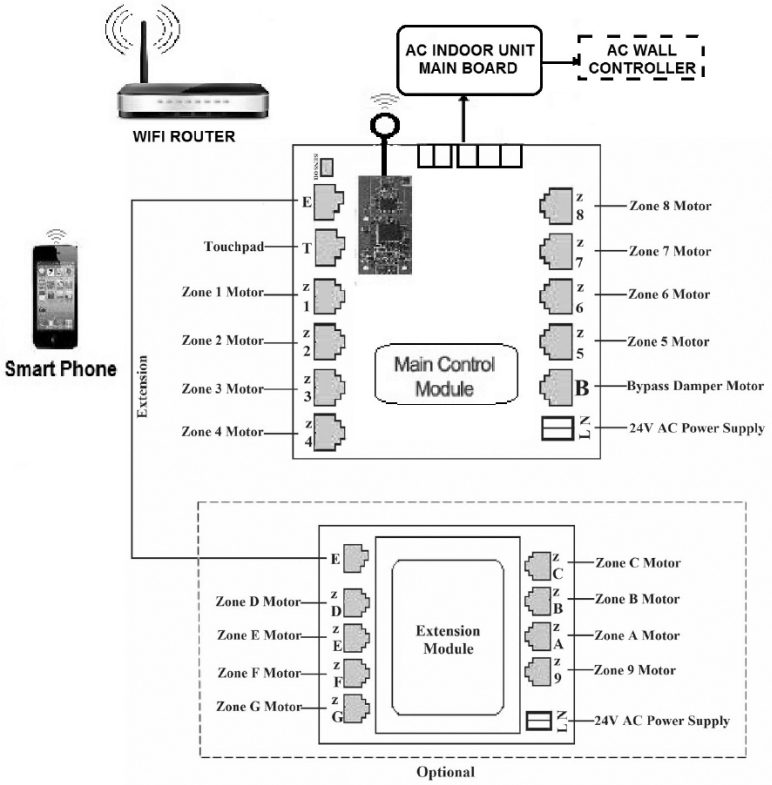

2. Generic Wiring Diagram for AC unit and AirTouch System

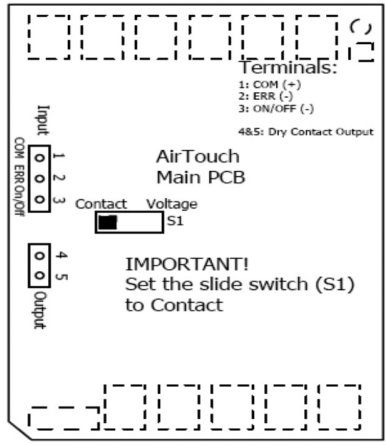

Generic Wiring

3. Wiring Diagram for Daikin AC unit and AirTouch System

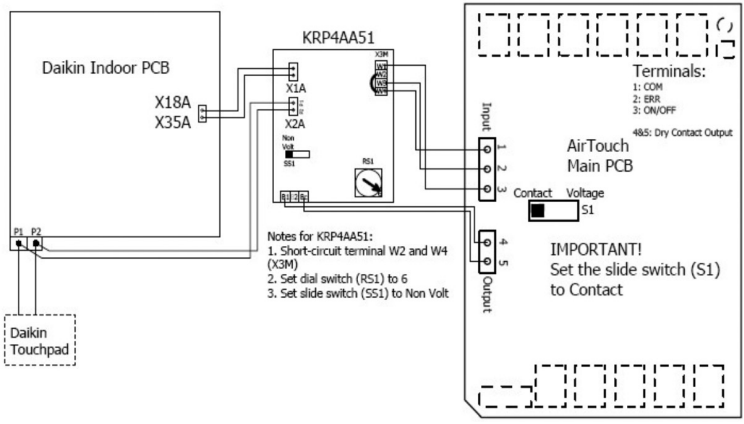

Daikin Indoor PCB, KRP4AA51 and AirTouch Mainboard

4. Wiring Diagram for Fujitsu AC unit and AirTouch System

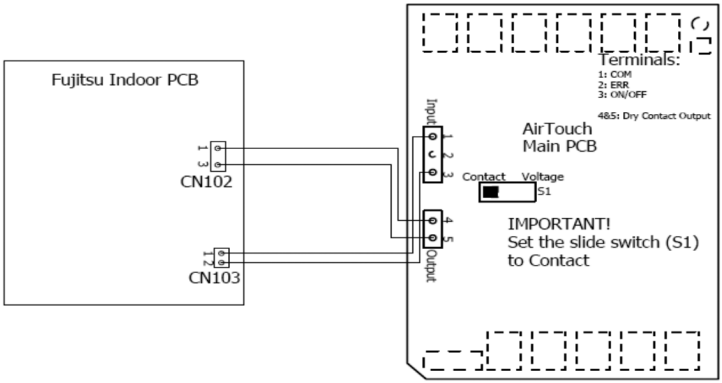

Fujitsu Indoor PCB and AirTouch Mainboard

5. Wiring Diagram for Hitachi AC unit and AirTouch System

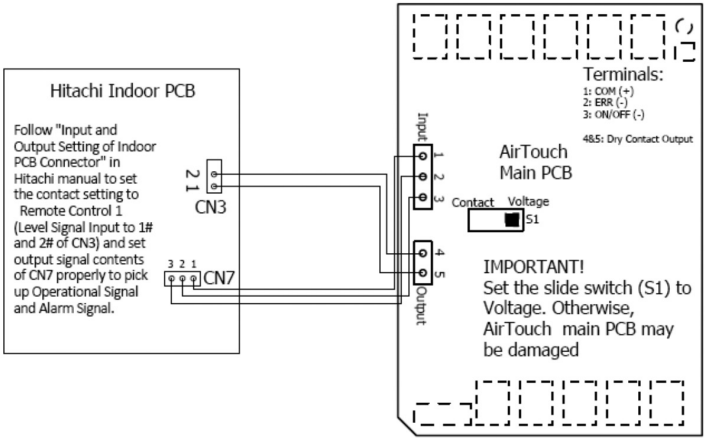

Hitachi Indoor PCB and AirTouch Mainboard

6. Wiring Diagram for LG AC unit and AirTouch System

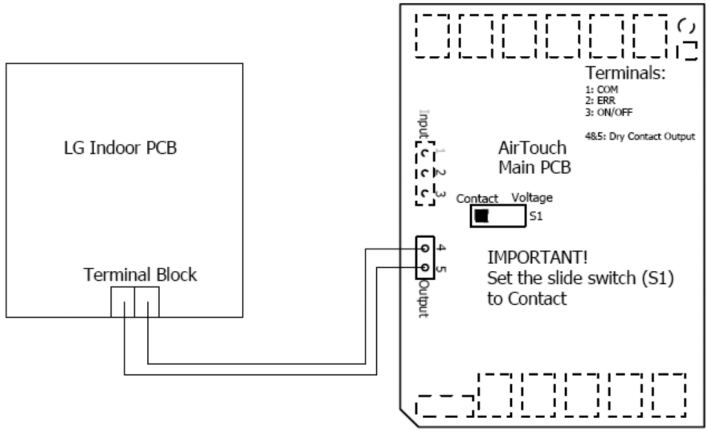

LG Indoor PCB and AirTouch Mainboard

7. Wiring Diagram for Mitsubishi Electric AC unit and AirTouch System

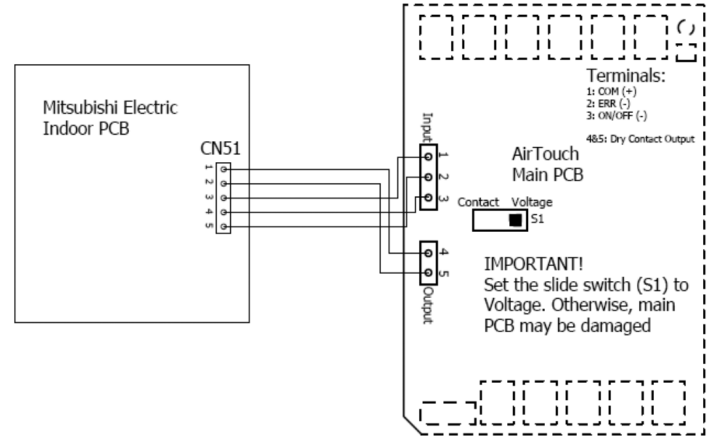

Mitsubishi Electric Indoor PCB and AirTouch Mainboard

8. Wiring Diagram for Panasonic with CZ-TA31P AC unit and AirTouch System

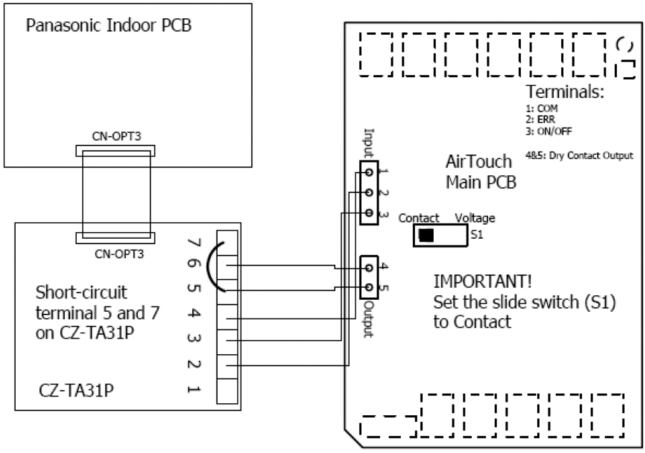

Panasonic Indoor PCB, CZ-TA31P and AirTouch Mainboard

9. Wiring Diagram for Panasonic without CZ-TA31P AC unit and AirTouch System

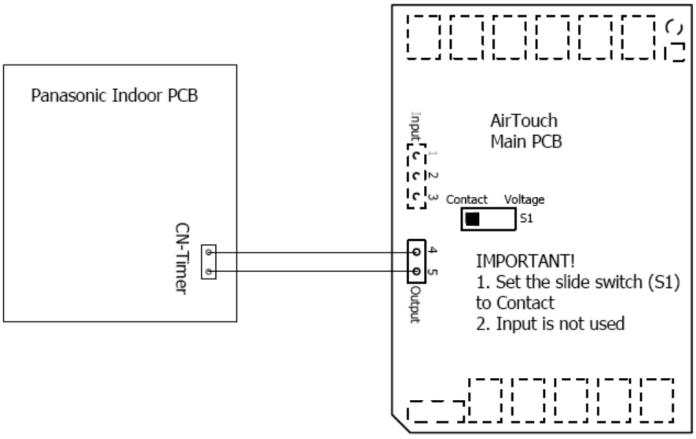

Panasonic Indoor PCB and AirTouch Mainboard

10. Wiring Diagram for Panasonic S Series (S-xxxPE1R5 Models) and AirTouch system

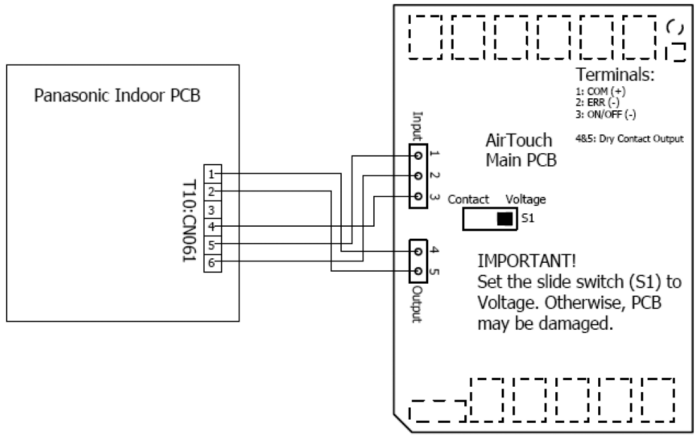

Panasonic S-xxxPE1R5 Indoor PCB and AirTouch Mainboard

11. Wiring Diagram for Samsung with MIM-B14 AC unit and AirTouch System

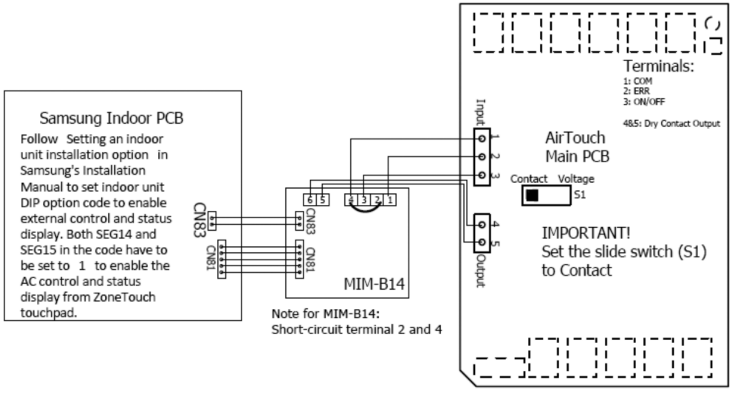

Samsung Indoor PCB, MIM-B14 and AirTouch Mainboard

12. Wiring Diagram for Samsung without MIM-B14 AC unit and AirTouch

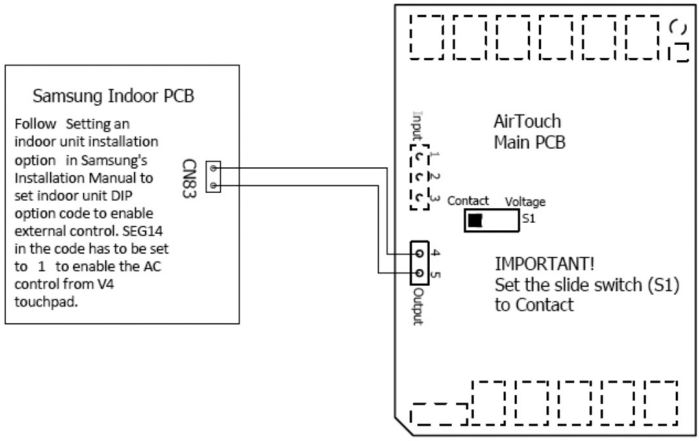

Samsung Indoor PCB and AirTouch Mainboard

13. Wiring Diagram for Toshiba AC unit and AirTouch

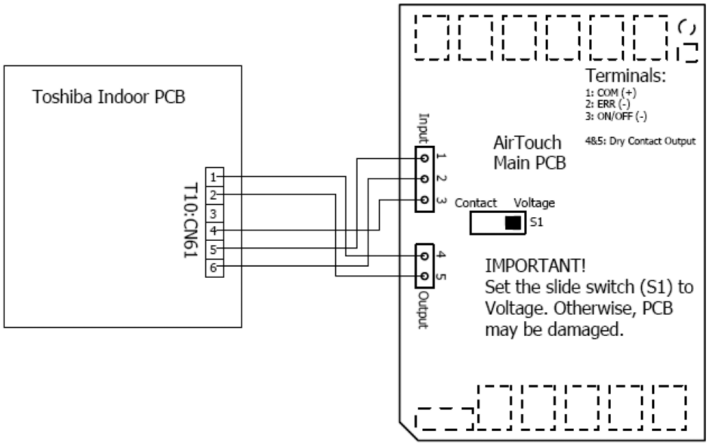

Toshiba Indoor PCB and AirTouch Mainboard

7.10 Downloading and Installing AirTouch Application on Mobile

AirTouch application can be downloaded from the following location. The application is available for free of charge.

For Android Phones: Go to Market / Google Play store from your android phone and search for AirTouch application developed by Zonemaster. After downloading the application, open the file and follow the prompts to install the application on your phone.

For iPhones: Go to the App store and search for AirTouch application developed by Zonemaster. Tap on the AirTouch app and press Install. Enter your iTunes password and the AirTouch app will be automatically downloaded and installed on your iPhone.

NOTE: Read the User Manual for accessing various functions of the Mobile App.

8) Troubleshooting Guide for Installers

No	PROBLEM	SOLUTION
1.	**WiFi setup does not display the required router**	a) Check if the power is turned ON to the router. b) Move the AirTouch module as close as practical to the router (1.5-2 metre distance) and carry out the WiFi setup process. c) Adjusting the antenna or the AirTouch main module position will help connect the router with the AirTouch system. d) Check the router settings for the following • DHCP server settings is turned ON • SSID (Wireless Network name) is visible. • If the Mac filter is enabled, enter the Mac address of the AirTouch system (located on the back casing of the AirTouch module) to the Router Mac Filter settings to allow the router to communicate with the AirTouch module. • Turn off the URL Filter • Check the router security protocols. If WEP is enabled, only 64 bit (10 Hex digits) can be used.
2.	**WiFi setup displays "Failed, check password, try again or go back to scan"**	a) Check if the power is turned ON to the desired router. b) If the connection failed after the password was entered, please check the password and try again.
3.	**AC unit does not respond from the AirTouch touch screen**	a) Check if the Power to the AC unit is switched ON. b) Check if the AC unit has been connected to the AirTouch system according to the appropriate wiring diagram. c) Check if the correct brand of the AC unit has been selected in the AC setup (Page 18). d) Check the AC unit instruction to ensure if a third party controller is enabled to be connected to the AC unit to turn the unit ON/OFF.

POLYAIRE PTY LTD
11-13 WHITE ROAD
GEPPS CROSS
SOUTH AUSTRALIA, 5094
TEL: (08) 8349 8466
FAX: (08) 8349 8446

www.polyaire.com.au